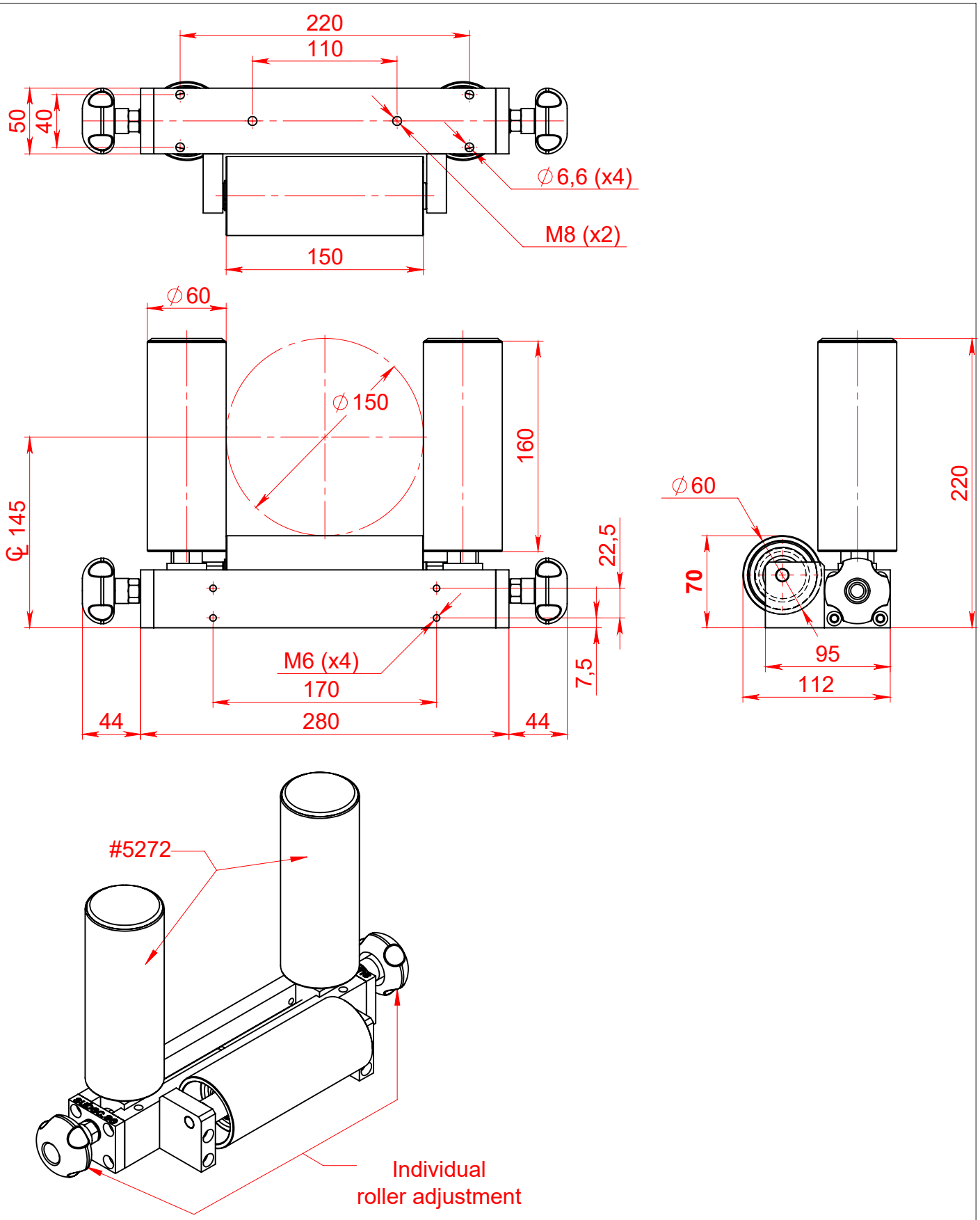

UNLESS OTHERWISE SPECIFIED: DIMENSIONS ARE IN MILLIMETERS SURFACE FINISH: TOLERANCES: LINEAR: ANGULAR:	FINISH: HRC:	DEBUR AND BREAK SHARP EDGES	DO NOT SCALE DRAWING	REVISION	
			SUBEC AB		
PROJECT NAME:			TITLE:		
PROJECT NO:			Adj.Guide Roll.D60L160 Hor.D60L150		
	NAME	SIGNATURE	DATE		
DRAWN	EIL		2019-08-28		
MATERIAL:		ARTICLE NO: 7297	DWG NO. 3-300078-00_7297		A4
Q.A		WEIGHT: g	SCALE:1:4	SHEET 1 OF 2	7297